REVISIONS			
REV.	DESCRIPTION	DATE	APPROVED
A	Added Washer Face Feature	7/19/2023	RAS

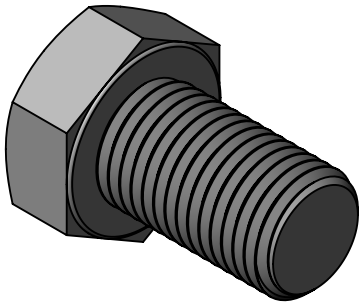

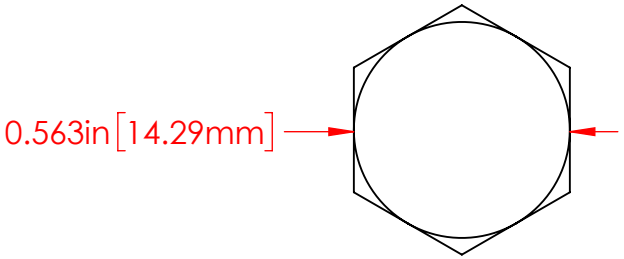

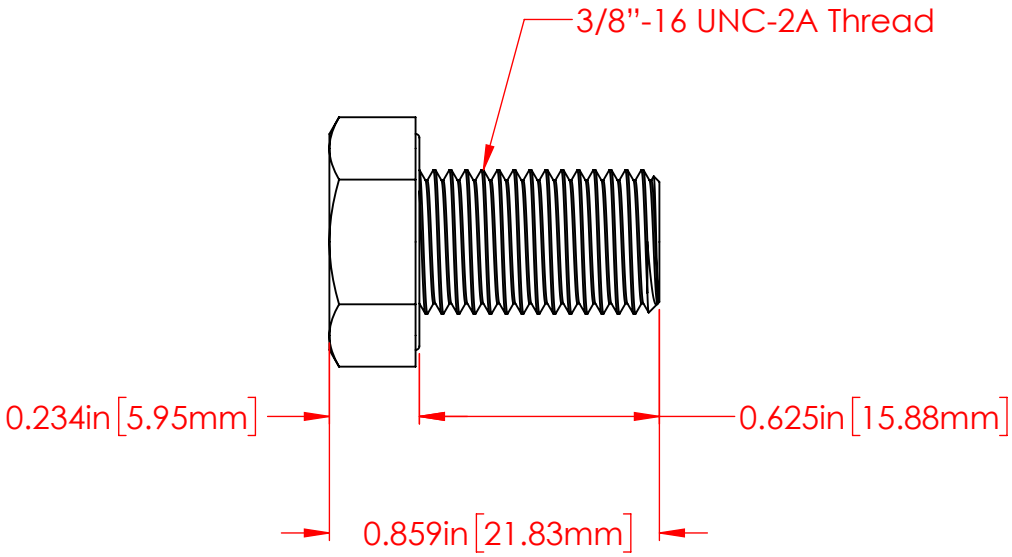

P/N 3740-012
3/8"-24 Fully Threaded
18-8 Stainless Steel Bolt

Part Material :
18-8 Stainless Steel

ALL DIMENSIONS GIVEN AS : INCH [METRIC]
TOLERANCES UNLESS OTHERWISE SPECIFIED :
HARDWARE PRODUCTS : ±.010" / ±0.25mm

PRINTED COPIES ARE NOT CONTROLLED

PROPRIETARY AND CONFIDENTIAL
THE INFORMATION CONTAINED IN THIS DRAWING IS THE SOLE PROPERTY OF VTE INCORPORATED. ANY REPRODUCTION IN PART OR AS A WHOLE WITHOUT THE WRITTEN PERMISSION OF VTE INCORPORATED PROHIBITED.

VTE INCORPORATED
5437 Robinson Road, P.O. Box 790
Pellston, Michigan 49769 USA
Telephone : 1-800-527-9256, 231-539-8000
Fax : 231-539-0914, EFax : 231-344-5914

REV		NAME	DATE	TITLE:
A	DRAWN BY:	RAS	7-17-23	3/8"-24 x .625" Stainless Steel Bolt
SIZE A	CHECKED BY:			DWG. NO. 3740-011
	DO NOT SCALE DRAWING			