THE INFORMATION CONTAINED IN THIS DRAWING IS THE SOLE PROPERTY OF VTE INCORPORATED. ANY REPRODUCTION IN PART OR WHOLE WITHOUT THE WRITTEN PERMISSION OF VTE INCORPORATED IS PROHIBITED.

LTR.	REVISIONS	DATE	INT.
A	ADDED -000 SUFFIX	17MAR06	BRH
B	ADDED CLASS OF FIT	06MAR08	BRH
C	UPDATED MATERIAL TYPE FROM 270/360	24FEB16	RAS
D	UPDATED MATERIAL TYPE FROM 360 BRASS	04SEP18	RAS

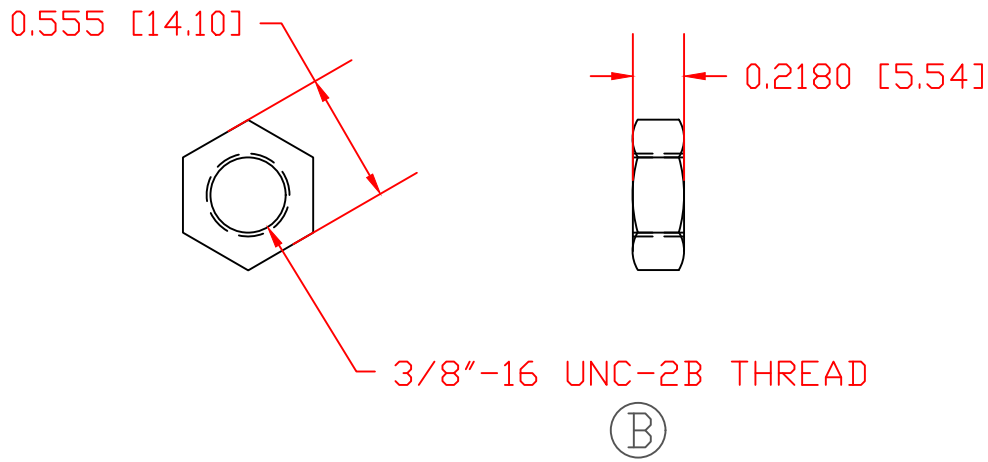

TOLERANCE UNLESS OTHERWISE SPECIFIED:
HARDWARE ITEMS: ±.010"/±0.25mm
RADIAL DIAMETERS TO BE MEASURED OVER MANDRELS,
RING GAGES OR PIN GAGES OF SUITABLE SIZE

D P/N 3838-000
3/8"-16 BRASS JAM NUT
270 BRASS ALLOY

VTE Incorporated
5437 Robinson Road, P.O. Box 790
Pellston, Michigan 49769
Telephone: 1-800-527-9256, 231-539-8000
FAX: 231-539-0914

REF:	DATE: 08JAN03	DRN BY: BRH CHK'D BY: BRH	WEIGHT:
TITLE:	3/8"-16 UNC BRASS JAM NUT		SCALE:
MATERIAL:	BRASS	PART NO. 3838-000	
COLOR:	DRG CLASS REV D		