THE INFORMATION CONTAINED IN THIS DRAWING IS THE SOLE PROPERTY OF VTE INCORPORATED. ANY REPRODUCTION IN PART OR WHOLE WITHOUT THE WRITTEN PERMISSION OF VTE INCORPORATED IS PROHIBITED. VTE MAKES NO WARRANTY, EXPRESSED OR IMPLIED, AS TO THE SUITABILITY OF A PRODUCT FOR ANY INTENDED USE. THE CUSTOMER SHALL BEAR THE SOLE RESPONSIBILITY OF DETERMINING THE SUITABILITY OF ANY VTE PRODUCT FOR ITS END USE.

LTR.	REVISIONS	DATE	INT.
A	UPDATED DIMENSIONS	11-12-15	RAS
B	ADDED ' REFERENCE ONLY' NOTE TO DIMENSION	7-20-22	RAS
C	UPDATED MATERIAL INFORMATION	8-02-22	RAS

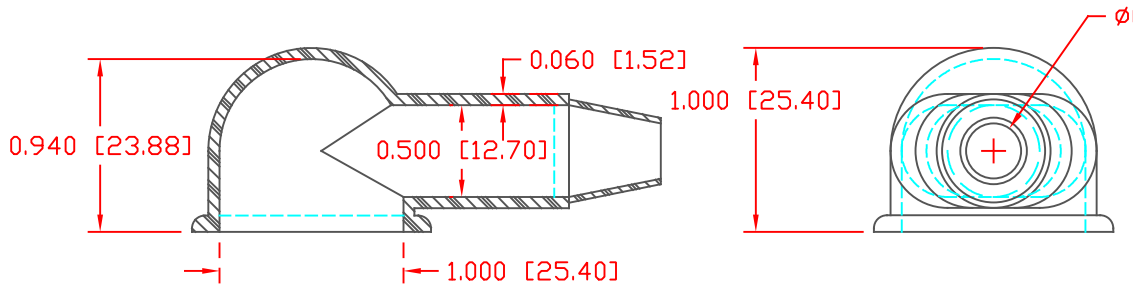

SECTION A-A
TYP. WALL THICKNESS = .060" [1.5]

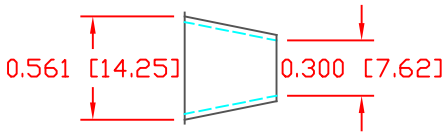

SEAL DETAILS
SEAL THICKNESS = .030" [.8]
SEAL TOLERANCE: +.030/-.010 [+.8/-.25]
WIRE GAGES: 8 - 2

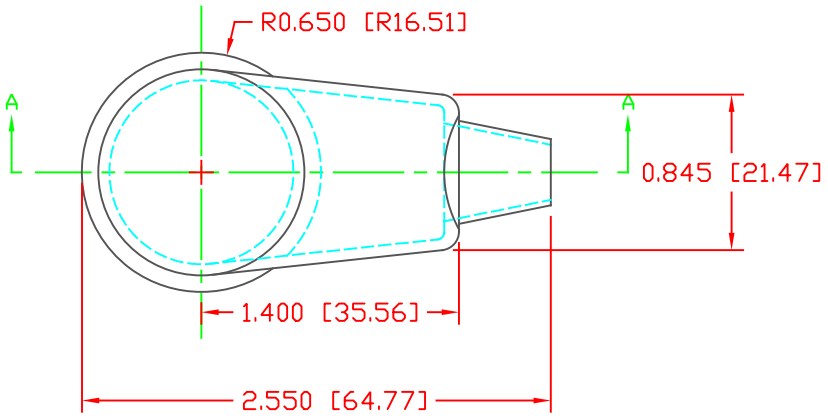

(REFERENCE ONLY)

MATERIAL PART NO:	1101700109
MATERIAL:	BLUE PVC
VENDOR PART NO:	7844-70 BLUE 1812
SPECIFIC GRAVITY:	1.36
HARDNESS 10 SEC:	70
HARDNESS SCALE:	A
TENSILE STRENGTH, PSI:	1100
ELONGATION, %:	310
TEAR STRENGTH, PPI:	200
FLAME CLASS UL:	HB
MELT TEMP., DEGREES F [C]:	320-340 [160-171]
DIELECTRIC STRENGTH, V./MIL:	N/A

SCALE FACTOR : NONE
ALL DIMENSIONS GIVEN AS: in [mm]
TOLERANCES UNLESS OTHERWISE SPECIFIED :
MOLDED PARTS: ±.030" [±0.8mm]
ALL ANGLES ARE ± 1 DEGREE

VTE Incorporated
5437 Robinson Road, P.O. Box 790
Pellston, Michigan 49769
Telephone: 1-800-527-9256, 231-539-8000
FAX: 231-539-0914

REF: CUSTOMER DIMS	DATE: 03-26-98	DRN BY: JC CHK'D BY: JC	WEIGHT: .019 LBS [8.48 g]
TITLE: EYELET TERMINAL INSULATOR			
MATERIAL: PVC		PART NO. 405N2V09	
COLOR: BLUE	DRG CLASS REV C		