REVISIONS			
REV.	DESCRIPTION	DATE	APPROVED
F	Redrawn in Solidworks	6/17/2026	RAS

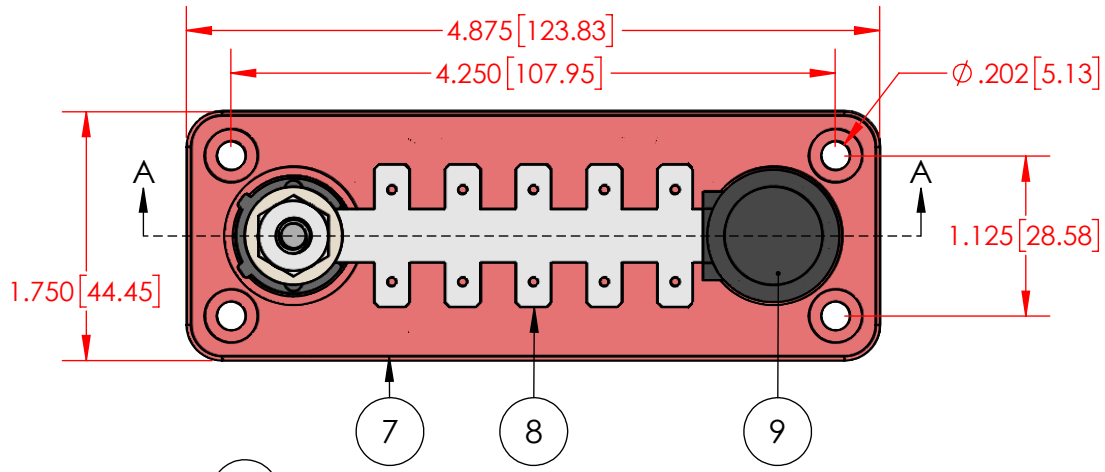

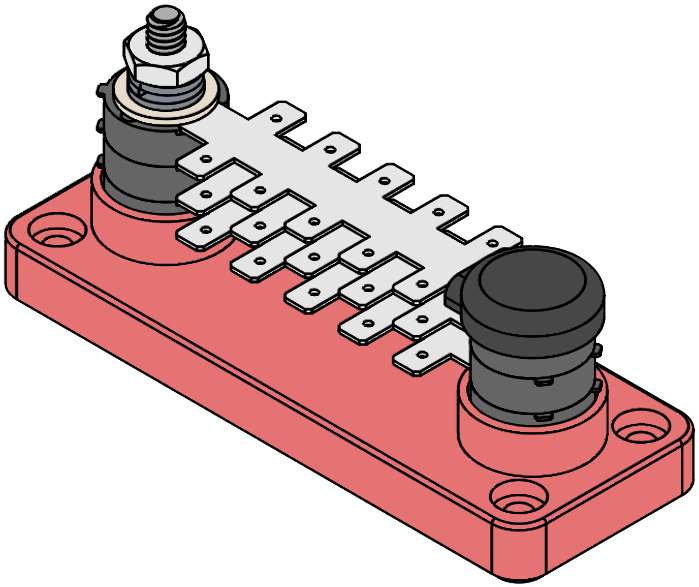

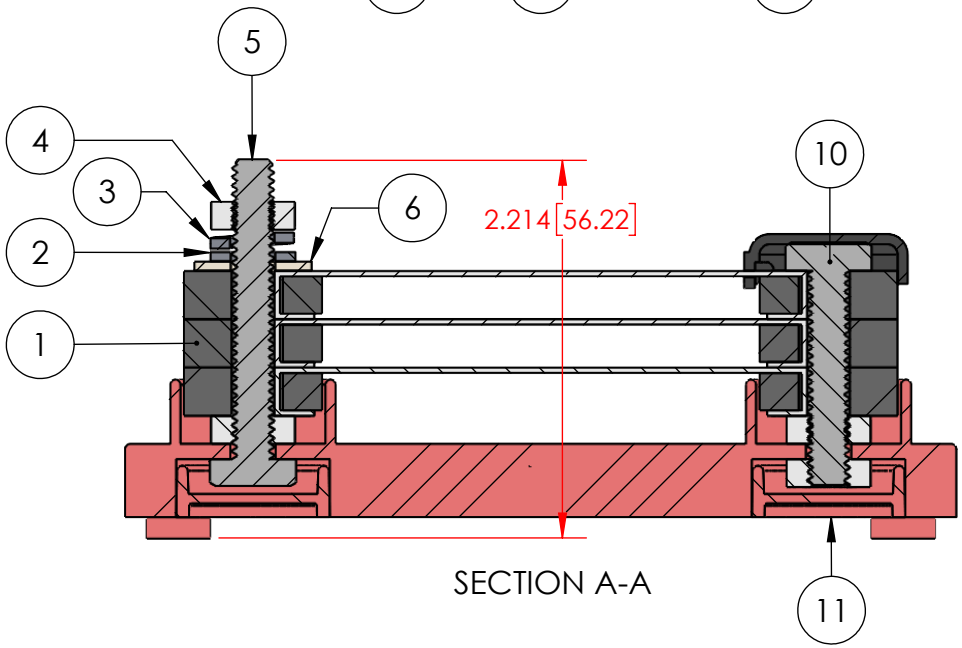

SECTION A-A

ITEM NO.	PART NUMBER	DESCRIPTION	QTY.
1	3715-001	Tab Type Busbar Spacer (Black)	6
2	3644-001	1/4" Stainless Steel Flat Washer	1
3	3637-000	1/4" 18-8 Stainless Steel Lock Washer	1
4	3842-006	1/4"-20 316 Stainless Steel Heavy Hex Jam Nut	4
5	3736-001	1/4-20 18-8 Stainless Steel Bolt 1.75"	1
6	3644-003	1/4" Nickel Plated Brass Flat Washer	1
7	701N9N02	Tab Type Busbar Base (Red)	1
8	3781-010	10 Point Contact Strip Nickel Plated Brass	3
9	332N9N14	Tab Type Busbar Insulator Cap (Black)	1
10	3736-000	1/4"-20 18-8 Stainless Steel Bolt 1.25"	1
11	329N0N02	Glass Filled Nylon Base Plug (Red)	2

Max Amperage: 55 amps @ 12 vdc per tier, 20 amps per connection
Max Voltage: 48 vdc

MATERIAL PART NO: 7111210502
MATERIAL: GLASS FILLED NYLON
VENDOR PART NO: HYLON N2015 NAT

MAX 1/4 FASTENER TORQUE: 72 IN./LBS. [8.14 Nm]

Assembly Weight : 0.29 Lbs. [130.1 g]

ALL DIMENSIONS GIVEN AS : INCH [METRIC]
TOLERANCES UNLESS OTHERWISE SPECIFIED :
MOLDED PRODUCTS : ±.030" / ±0.8mm
HARDWARE PRODUCTS : ±.010" / ±0.25mm

PRINTED COPIES ARE NOT CONTROLLED

PROPRIETARY AND CONFIDENTIAL
THE INFORMATION CONTAINED IN THIS DRAWING IS THE SOLE PROPERTY OF VTE INCORPORATED. ANY REPRODUCTION IN PART OR AS A WHOLE WITHOUT THE WRITTEN PERMISSION OF VTE INCORPORATED PROHIBITED.

VTE INCORPORATED
5437 Robinson Road, P.O. Box 790
Pellston, Michigan 49769 USA
Telephone : 1-800-527-9256, 231-539-8000
Fax : 231-539-0914, EFax : 231-344-5914

REV	F		NAME	DATE	TITLE: 30 Point Tab Type Busbar Assembly
		DRAWN BY:	RAS	6-17-26	
SIZE	A	CHECKED BY:			DWG. NO. TTB730N02
		DO NOT SCALE DRAWING			