THE INFORMATION CONTAINED IN THIS DRAWING IS THE SOLE PROPERTY OF VTE INCORPORATED. ANY REPRODUCTION IN PART OR WHOLE WITHOUT THE WRITTEN PERMISSION OF VTE INCORPORATED IS PROHIBITED. VTE MAKES NO WARRANTY, EXPRESSED OR IMPLIED, AS TO THE SUITABILITY OF A PRODUCT FOR ANY INTENDED USE. THE CUSTOMER SHALL BEAR THE SOLE RESPONSIBILITY OF DETERMINING THE SUITABILITY OF ANY VTE PRODUCT FOR ITS END USE.

LTR.	REVISIONS	DATE	INT.
A	SEAL WALL THICKNESS REVISED TO 0.075"	11-04-19	EJE
B	UPDATED MATERIAL INFORMATION	8-02-22	RAS
C	REMOVED "TYP. WALL THICKNESS" NOTE	10-24-22	RAS
D	UPDATED CLEAR MATERIAL INFORMATION	10-24-23	RAS
E	1.210 [30.73] UPDATED FROM 1.260 [32.00]	12-16-25	RAS

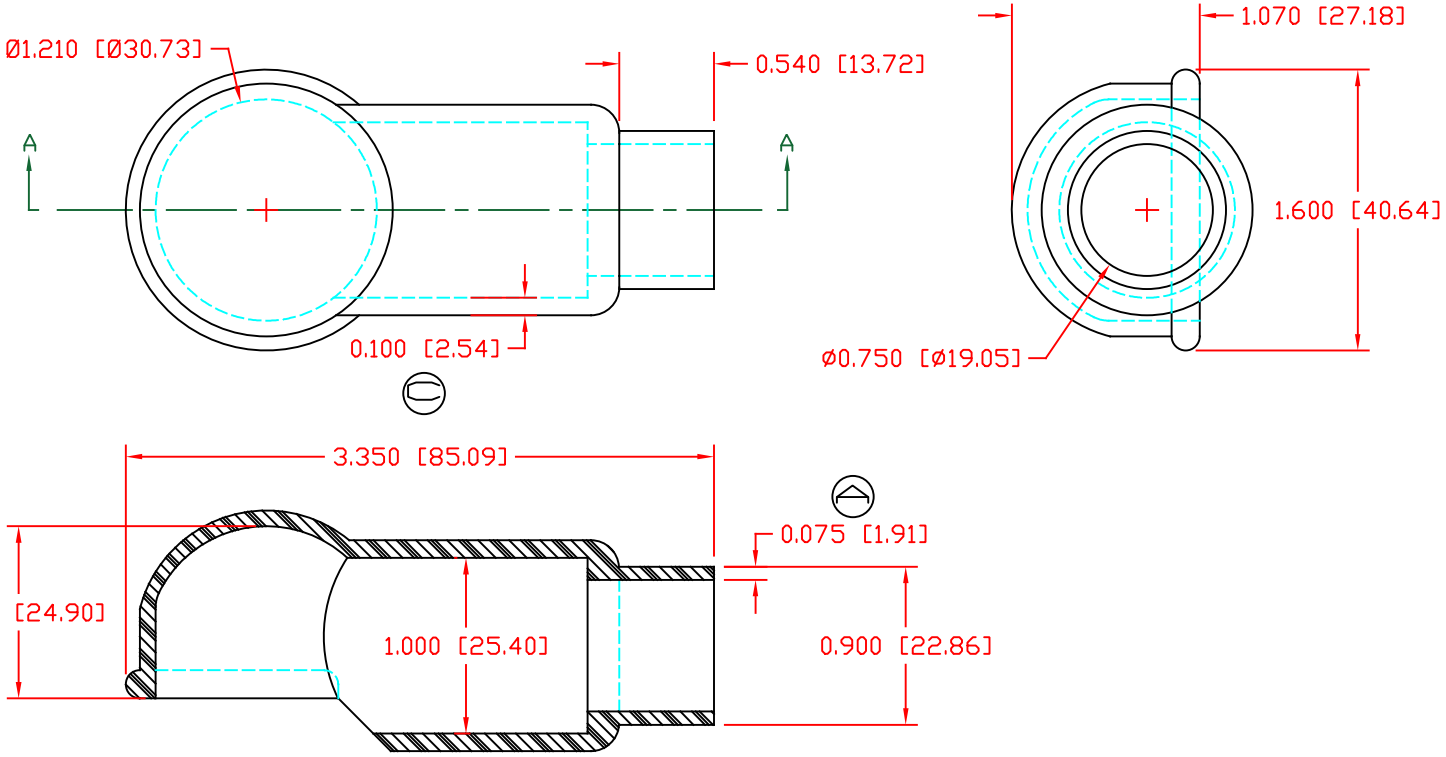

SECTION A-A

SCALE FACTOR : NONE
ALL DIMENSIONS GIVEN AS: in [mm]
TOLERANCES UNLESS OTHERWISE SPECIFIED :
MOLDED PARTS: ±.030" [±0.8mm]
ALL ANGLES ARE ± 1 DEGREE

MATERIAL PART NO:	1101650114
MATERIAL:	PVC
VENDOR PART NO:	9812-65-BLACK
SHORE DUROMETER:	"A" 10 SEC. 65
SPECIFIC GRAVITY:	1.34
ULT. ELONGATION %:	400
MELTING TEMP:	315-335 F [157-168 C]
BRITTLE TEMP:	-54 F [-48 C]
TENSILE STRENGTH PSI:	1550 PSI
DIELECTRIC STRENGTH, V./mil	453
U.L. RATING:	V2

VTE Incorporated
5437 Robinson Road, P.O. Box 790
Pellston, Michigan 49769
Telephone: 1-800-527-9256, 231-539-8000
FAX: 231-539-0914

REF:	DATE: 4-3-98	DRN BY: JC CHK'D BY:	WEIGHT: .058 LBS. / 26.4 G.
TITLE:	STARTER EYELET TERMINAL INSULATOR		
MATERIAL: PVC		PART NO. 487N9V14	
COLOR: BLACK	DRG CLASS REV E		