REVISIONS			
REV.	DESCRIPTION	DATE	APPROVED
M	Redrawn in Solidworks	6/03/2026	RAS

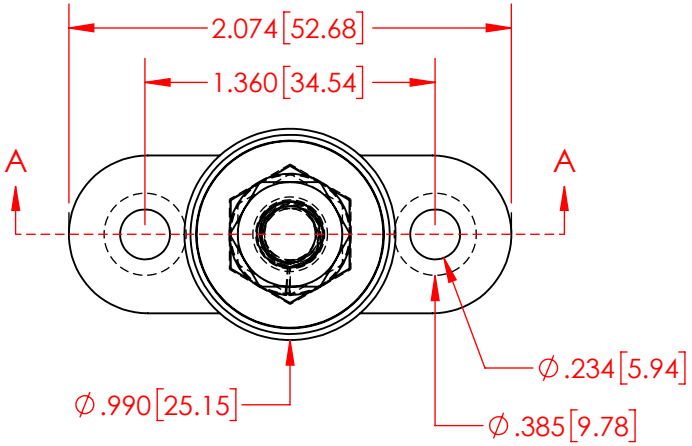

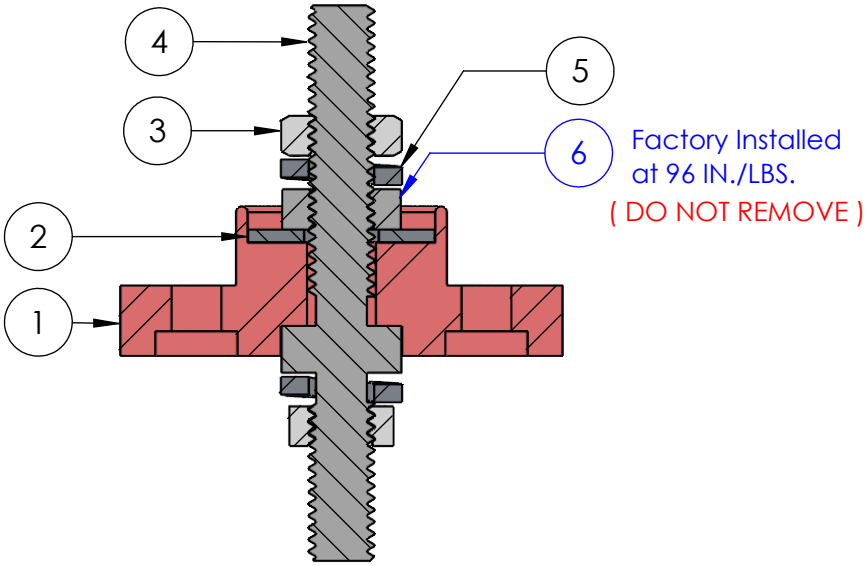

SECTION A-A

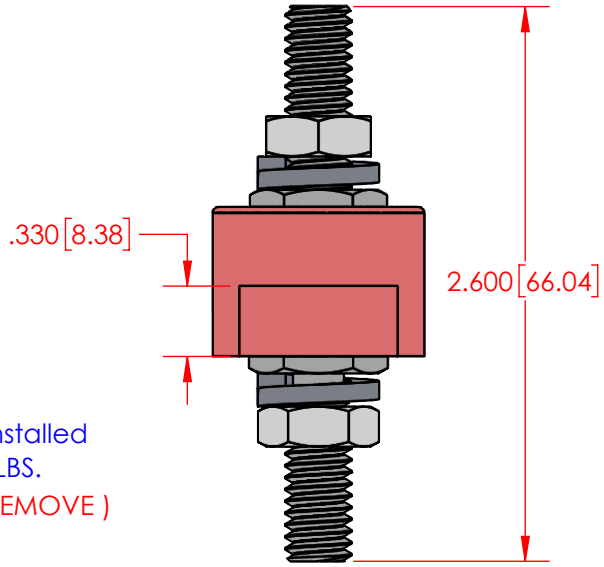

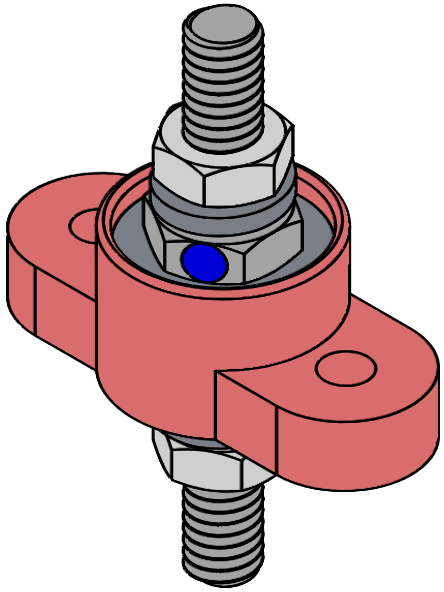

INCLUDES P-16808110001 BLUE DOT MULTI LABEL, 1 PER CONTAINER

ITEM NO.	PART NUMBER	DESCRIPTION	QTY.
1	327D6N02	5/16" Through Panel Power Post Base (Red)	1
2	3645-000	5/16" 18-8 Stainless Steel Flat Washer	1
3	3843-010	5/16"-18 316 Stainless Steel Jam Nut	2
4	3744-009	5/16"-18 Nickel Plated Brass Double Ended Stud	1
5	3642-000	5/16" 18-8 Stainless Steel Lock Washer	2
6	3843-B00	5/16"-18 Tin Plated Brass Heavy Hex Jam Nut	1

Max Amperage: 250 amps @ 12 vdc
Max Voltage: 48 vdc

MATERIAL PART NO: 7111210502
MATERIAL: GLASS FILLED NYLON
VENDOR PART NO: HYLON N2015 NAT

MAX 5/16 FASTENER TORQUE: 101 IN./LBS. [11.4 Nm]

Assembly Weight : 0.13 Lbs. [60.1 g]

ALL DIMENSIONS GIVEN AS : INCH [METRIC]
TOLERANCES UNLESS OTHERWISE SPECIFIED :
MOLDED PRODUCTS : ±.030" / ±0.8mm
HARDWARE PRODUCTS : ±.010" / ±0.25mm

PRINTED COPIES ARE NOT CONTROLLED

PROPRIETARY AND CONFIDENTIAL
THE INFORMATION CONTAINED IN THIS DRAWING IS THE SOLE PROPERTY OF VTE INCORPORATED. ANY REPRODUCTION IN PART OR AS A WHOLE WITHOUT THE WRITTEN PERMISSION OF VTE INCORPORATED PROHIBITED.

VTE INCORPORATED
5437 Robinson Road, P.O. Box 790
Pellston, Michigan 49769 USA
Telephone : 1-800-527-9256, 231-539-8000
Fax : 231-539-0914, EFax : 231-344-5914

REV		NAME	DATE	TITLE:
M	DRAWN BY:	RAS	6-03-26	5/16" Thru Panel Assembly
SIZE A	CHECKED BY:			DWG. NO. 77231N02
	DO NOT SCALE DRAWING			