REVISIONS			
REV.	DESCRIPTION	DATE	APPROVED
G	Redrawn in Solidworks	5/28/2026	RAS

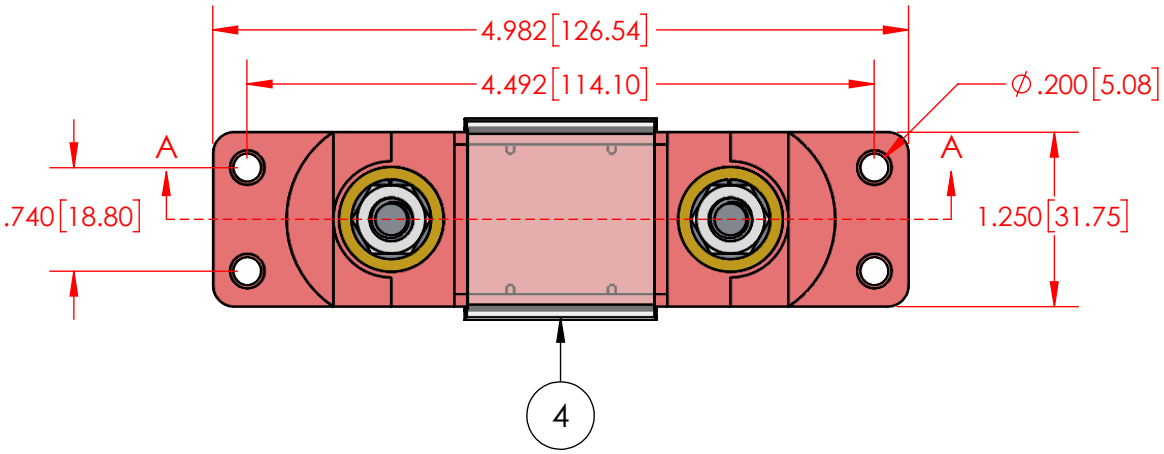

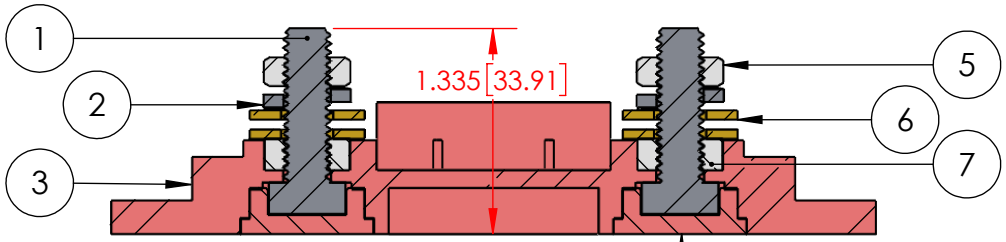

SECTION A-A

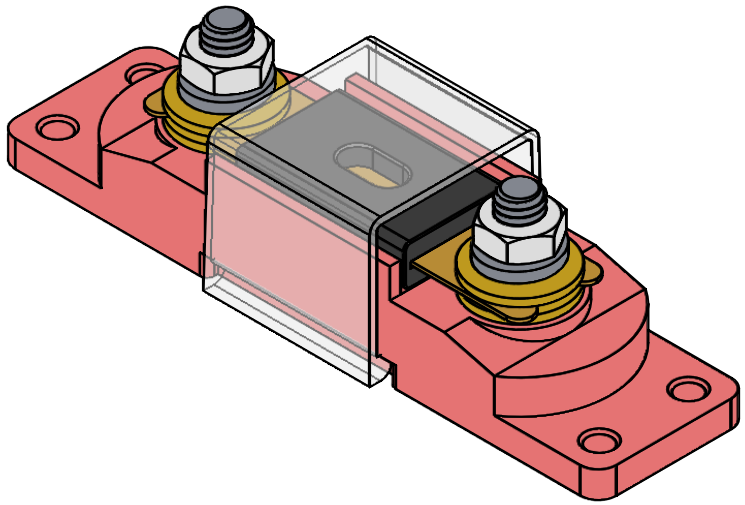

(FUSE NOT INCLUDED)

Assembly Includes : (2) 487N8V02 Terminal Insulators

ITEM NO.	PART NUMBER	DESCRIPTION	QTY.
1	3730-005	5/16-18 18-8 Stainless Steel Bolt 1"	2
2	3642-000	5/16" 18-8 Stainless Steel Lock Washer	2
3	340N9N02	Fuse Holder Base (Red)	1
4	342N0P00	Clear ANL Fuse Holder Cover	1
5	3843-010	5/16-18 316 Stainless Steel Jam Nut	2
6	3645-C	5/16" Brass Flat Washer	4
7	3843-009	5/16-18 316 Stainless Steel Heavy Hex Nut	2
8	331N0N02	Fuse Holder Base Plug (Red)	2
9	487N8V02	Terminal Insulator (Red)	2

Max Amperage: 300 amps @ 12 vdc
Max Voltage: 48 vdc

MATERIAL PART NO: 7111210502
MATERIAL: GLASS FILLED NYLON
VENDOR PART NO: HYLON N2015 NAT

MAX 5/16 FASTENER TORQUE: 144 IN./LBS. [16.2 Nm]

Assembly Weight : 0.30 Lbs. [136.9 g]

ALL DIMENSIONS GIVEN AS : INCH [METRIC]
TOLERANCES UNLESS OTHERWISE SPECIFIED :
MOLDED PRODUCTS : ±.030" / ±0.8mm
HARDWARE PRODUCTS : ±.010" / ±0.25mm

PRINTED COPIES ARE NOT CONTROLLED

PROPRIETARY AND CONFIDENTIAL
THE INFORMATION CONTAINED IN THIS DRAWING IS THE SOLE PROPERTY OF VTE INCORPORATED. ANY REPRODUCTION IN PART OR AS A WHOLE WITHOUT THE WRITTEN PERMISSION OF VTE INCORPORATED PROHIBITED.

VTE INCORPORATED
5437 Robinson Road, P.O. Box 790
Pellston, Michigan 49769 USA
Telephone : 1-800-527-9256, 231-539-8000
Fax : 231-539-0914, EFax : 231-344-5914

REV G		NAME	DATE	TITLE: ANL Fuse Holder Assembly
	DRAWN BY:	RAS	5-28-26	
SIZE A	CHECKED BY:			DWG. NO. **ANB740N9N02**
	DO NOT SCALE DRAWING			