REVISIONS			
REV.	DESCRIPTION	DATE	APPROVED
H	Redrawn in Solidworks	7/14/2026	RAS

Use Greenlee Punch
Assembly #60098
for Panel Cutout

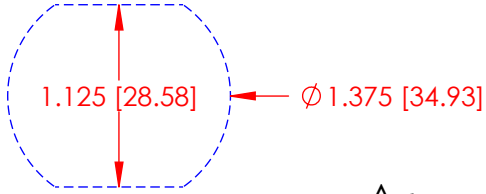

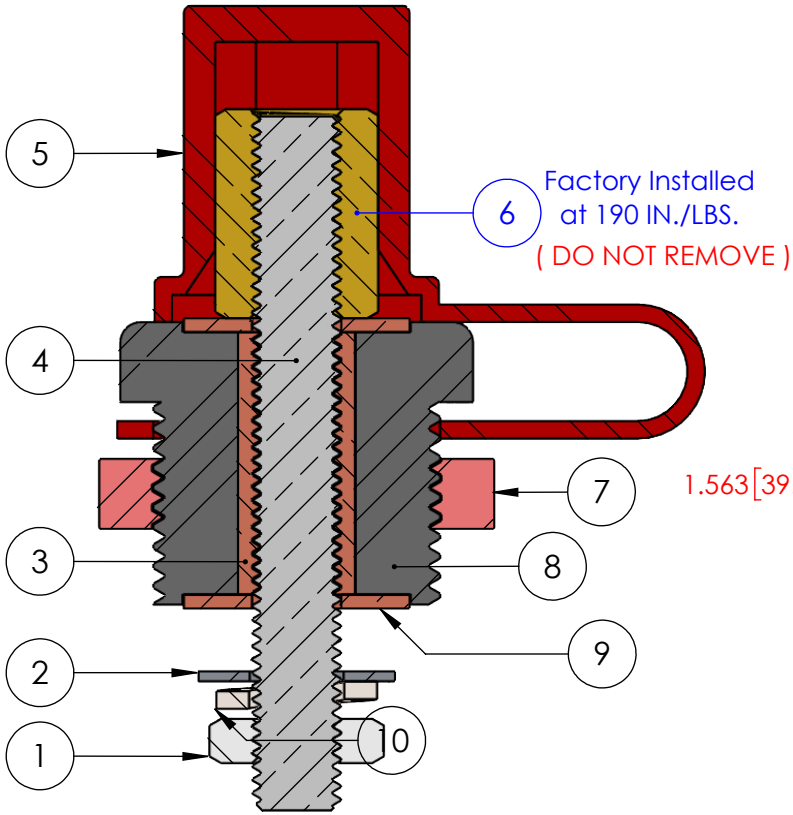

SECTION A-A

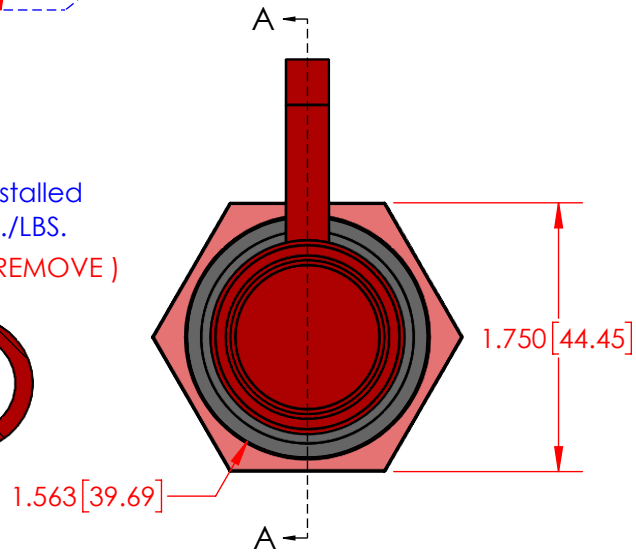

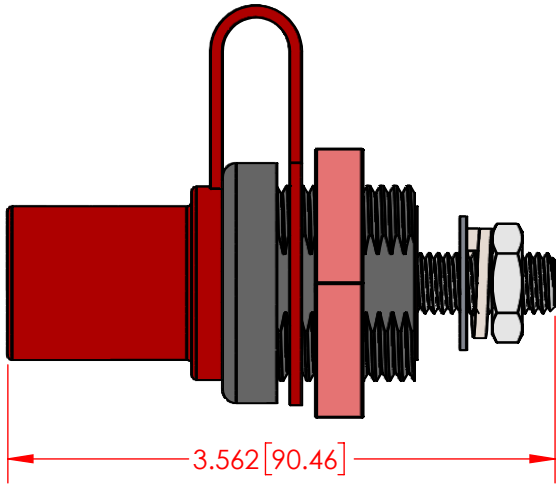

ITEM NO.	PART NUMBER	DESCRIPTION	QTY.
1	3845-000	10mm x 1.5 316 Stainless Steel Heavy Hex Jam Nut	1
2	3646-000	3/8" 18-8 Stainless Steel Flat Washer	1
3	3864-000	M10 Copper Core Bushing	1
4	3742-009	M10 x 1.5 Nickel Plated Steel Double Ended Stud	1
5	319N8V02	Terminal Insulator (Red)	1
6	3871-005	10mm x 1.5 Brass Extended Hex Nut	1
7	359N0N02	Glass Filled Nylon Locking Nut (Red)	1
8	360N8N14	Glass Filled Nylon Housing (Black)	1
9	3648-003	10mm Copper Flat Washer	2
10	3638-M	M10 18-8 Stainless Steel Lock Washer	1

Max Amperage: 350 amps @ 12 vdc
Max Voltage: 48 vdc

MATERIAL PART NO: 1111210514UL
MATERIAL: GLASS FILLED NYLON
VENDOR PART NO: HYLON N2015 HL BK

MAX M10 FASTENER TORQUE: 212 IN./LBS. [24.0 Nm]
MAX NYLON NUT TORQUE: 120 IN./LBS. [13.56 Nm]

Assembly Weight :
0.34 Lbs. [154.0 g]

ALL DIMENSIONS GIVEN AS : INCH [METRIC]
TOLERANCES UNLESS OTHERWISE SPECIFIED :
MOLDED PRODUCTS : ±.030" / ±0.8mm
HARDWARE PRODUCTS : ±.010" / ±0.25mm

PRINTED COPIES ARE NOT CONTROLLED

PROPRIETARY AND CONFIDENTIAL
THE INFORMATION CONTAINED IN THIS DRAWING IS THE SOLE PROPERTY OF VTE INCORPORATED. ANY REPRODUCTION IN PART OR AS A WHOLE WITHOUT THE WRITTEN PERMISSION OF VTE INCORPORATED PROHIBITED.

VTE INCORPORATED
5437 Robinson Road, P.O. Box 790
Pellston, Michigan 49769 USA
Telephone : 1-800-527-9256, 231-539-8000
Fax : 231-539-0914, EFax : 231-344-5914

REV		NAME	DATE	TITLE:
H	DRAWN BY:	RAS	7-14-26	M10 Jumper Bushing Assembly
SIZE A	CHECKED BY:			DWG. NO. CCJB376M0N02
	DO NOT SCALE DRAWING			